Winton Agri-Machinery

OPERATOR'S MANUAL

WINTON WOOD CHIPPER

PART NO(S): WWC4

IMPORTANT

Read these instructions before installing and using this implement

CONTENTS

WOOD CHIPPER

Safe, efficient and trouble free operation of your Wood Chipper requires that you and anyone else who will be using or maintaining the chipper, read and understand the Safety, Operation, Maintenance Trouble Shooting information contained within the Operator's Manual.

This manual covers the 3 Point Hitch Wood Chipper WWC4, Use the Table of Contents or Index as a guide to locate required information.

Keep this manual handy for frequent reference and to pass on to new operators or owners.

OPERATOR ORIENTATION - The directions left, right, front and rear, as mentioned throughout this manual, are determined when sitting in the tractor driver's seat and facing in the direction of travel.

SPECIFICATIONS:

PART No.	Max. wood diameter	Implement Width	Implement Depth	Implement Height			kg
G-WCX5	4 inches	160 cm	130 cm	160 cm	4	14-48 hp	195

SAFETY ALERT SYMBOL

This Safety Alert symbol means ATTENTION! BECOME ALERT! YOUR SAFETY IS INVOLVED!

The Safety Alert symbol identifies important safety messages on the 3 Point Hitch Wood Chipper and in the manual. When you see this symbol, be alert to the possibility of personal injury or death. Follow the instructions in the safety message.

Why is SAFETY important to you?

3 Big Reasons

Accidents Disable and Kill

Accidents Cost

Accidents Can Be Avoided

SIGNAL WORDS:

Note the use of the signal words DANGER, WARNING and CAUTION with the safety messages. The appropriate signal word for each message has been selected using the following guide-lines:

DANGER - Indicates an imminently hazardous situation that, if not avoided, will result in death or serious injury. This signal word is to be limited to the most extreme situations typically for machine components which, for functional purposes, cannot be guarded.

WARNING - Indicates a potentially hazardous situation that, if not avoided, could result in death or serious injury, and includes hazards that are exposed when guards are removed. It may also be used to alert against unsafe practices.

CAUTION - Indicates a potentially hazardous situation that, if not avoided, may result in minor or moderate injury. It may also be used to alert against unsafe practices.

YOU are responsible for the SAFE operation and maintenance of your 3 Point Hitch Wood Chipper. YOU must ensure that you and anyone else who is going to use, maintain or work around the 3 Point Hitch Wood Chipper be familiar with the using and maintenance procedures and related SAFETY information contained in this manual. This manual will take you step-by-step through your working day and alerts you to all good safety practices that should be used while using the 3 Point Hitch Wood Chipper.

Remember, YOU are the key to safety. Good safety practices not only protect you but also the people around you. Make these practices a working part of your safety program. Be certain that EVERYONE using this equipment is familiar with the recommended using and maintenance procedures and follows all the safety precautions. Most accidents can be prevented. Do not risk injury or death by ignoring good safety practices

3 Point Hitch Wood Chipper owners must give operating instructions to operators or employees before allowing them to operate the machine, and at least annually thereafter.

The most important safety device on this equipment is a SAFE operator. It is the operator's responsibility to read and understand ALL Safety and Operating instructions in the manual and to follow these. Most accidents can be avoided.

A person who has not read and understood all using and safety instructions is not qualified to use the machine. An untrained operator exposes himself and bystanders to possible serious injury or death.

Do not modify the equipment in any way. Unauthorized modification may impair the function and/or safety and could affect the life of the equipment.

- Think SAFETY! Work SAFELY!

2.1 GENERAL SAFETY

1. Read and understand the Operator's Manual and all safety signs before using, maintaining, adjusting or cleaning the 3 Point Hitch Wood Chipper.
2. Have a first-aid kit available for use should the need arise and know how to use it.
3. Have a fire extinguisher available for use should the need arise and know how to use it.
4. Do not allow riders.
5. Wear appropriate protective gear. This list includes but is not limited to:

- A hard hat
- Protective shoes with slip resistant soles
- Protective glasses, goggles or face shield
- Heavy gloves
- Wet weather gear
- Hearing Protection
- Respirator or filter mask

6. Install and secure all guards before starting.

7. Wear suitable ear protection for prolonged exposure to excessive noise.

8. Turn machine off, stop and disable engine, remove ignition key and place in your pocket, set park brake and wait for all moving parts to stop before servicing, adjusting, repairing or unplugging.

9. Clear the area of people, especially small children, before using the unit.

10. Review safety related items annually with all personnel who will operate or maintaining the 3 Point Hitch Wood Chipper.

2.2 EQUIPMENT SAFETY GUIDELINES

1. Safety of the operator and bystanders is one of the main concerns in designing and developing equipment. However, every year many accidents occur which could have been avoided by a few seconds of thought and a more careful approach to handling equipment. You, the operator, can avoid many accidents by observing the following precautions in this section. To avoid personal injury or death, study the following precautions and insist those working with you, or for you to follow them.

2. In order to provide a better view, certain photographs or illustrations in this manual may show an assembly with a safety shield removed. However, equipment should never be used in this condition. Keep all shields in place. If shield removal becomes necessary for repairs, replace the shield prior to use.

3. Replace any safety sign or instruction sign that is not readable or is missing. Location of such safety signs is indicated in this manual.

4. Never use alcoholic beverages or drugs which can hinder alertness or coordination while using this equipment. Consult your doctor about using this machine while taking prescription medications.

5. Under no circumstances should young children be allowed to work with this equipment. Do not allow persons to use or assemble this unit until they have read this manual and have developed a thorough understanding of the safety precautions and of how it works. Review the safety instructions with all users annually.

6. This equipment is dangerous to children and persons unfamiliar with its operation. The operator should be a responsible, properly trained and physically able person familiar with machinery and trained in this equipment's operations. If the elderly are assisting with work, their physical limitations need to be recognized and accommodated.

7. Never exceed the limits of a piece of machinery. If its ability to do a job, or to do so safely, is in question - DON'T TRY IT.

8. Do not modify the equipment in any way. Un- authorized modification may result in serious injury or death and may impair the function and life of the equipment.

9. In addition to the design and configuration of this implement, including Safety Signs and Safety Equipment, hazard control and accident prevention are dependent upon the awareness, concern, prudence, and proper training of personnel involved in the operation, transport, maintenance, and storage of the machine. Refer also to Safety Messages and operation instruction in each of the appropriate sections of the tractor and machine manuals. Pay close attention to the Safety Signs affixed to the tractor and the machine.

The types of safety signs and locations on the equipment are shown in the illustrations that follow. Good safety requires that you familiarize yourself with the various safety signs, the type of warning and the area, or particular function related to that area, that requires your SAFETY AWARENESS

REMEMBER - If safety signs have been damaged, removed, become illegible or parts replaced without safety signs, new signs must be applied. New safety signs are available from your authorized dealer.

The types of safety signs and locations on the equipment are shown in the illustrations that follow. Good safety requires that you familiarize yourself with the various safety signs, the type of warning and the area, or particular function related to that area, that requires your SAFETY AWARENESS.

- Think SAFETY! Work SAFELY!

WARNING

HIGH PRESSURE FLUID HAZARD

To prevent serious injury or death from high-pressure fluid:

- Relieve pressure on system before repairing or adjusting.
- Wear proper hand and eye protection when searching for leaks. Use wood or cardboard instead of hands.
- Keep all components in good repair.

Z9400

DANGER

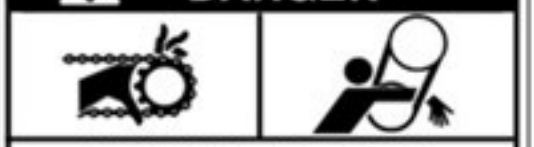

MISSING GUARD HAZARD

- Close and secure all guards and shields before operating.
- Do not operate without guards and shields.

Z940 0 1

DANGER

ROTATING DRIVELINE HAZARD
CONTACT CAN CAUSE DEATH
KEEP AWAY!

DO NOT OPERATE WITHOUT:

- ALL DRIVELINE, TRACTOR AND EQUIPMENT SHIELDS IN PLACE.
- DRIVELINES SECURELY ATTACHED AT BOTH ENDS.
- DRIVELINE SHIELDS THAT TURN FREELY ON DRIVELINE.

Z940 0

DANGER

GUARDS MISSING
DO NOT OPERATE

Z940 0

DANGER

THROWN OBJECT HAZARD

To prevent serious injury or death from thrown objects:

- Turn machine off, stop and disable engine, remove ignition key and place in your pocket, set park brake and wait for all moving parts to stop before adjusting, servicing, maintaining, repairing or unplugging.
- Do not direct discharge duct towards people, animals or property. Always wear appropriate safety gear. Keep hands and feet out of discharge openings.
- Keep others away.

Z9400

DANGER

ROTATING DRIVELINE HAZARD
KEEP AWAY

To prevent serious injury or death from rotating driveline:

- Keep all guards in place when operating.
- Operate only at 540 RPM.
- Keep hands, feet, hair and clothing away from moving parts.
- Keep U-joint angles equal and small as possible.
- Do not exceed driveline manufacturers recommended operating length.

Z94010

WARNING

ROTATING PART HAZARD
KEEP AWAY

To prevent serious injury or death from rotating parts:

- Turn machine off, stop and disable engine, remove ignition key and place in your pocket, set park brake and wait for all moving parts to stop before adjusting, servicing, maintaining, repairing or unplugging.
- Close and secure guard before operating.
- Keep hands, feet, hair and clothing away from moving parts.

Z94012

Although there are no operational restrictions on the Wood Chipper when used for the first time, it is recommended that the following mechanical items be checked:

A. After operating for 1 hour:

1. Torque all fasteners and hardware.
2. Check condition of rotor bearings.
3. Check the condition and clearance of the twig-breaker, rotor and stationary blades. Adjust or replace as required.
4. Check for entangled material. Remove all entangled material before resuming work.
5. Lubricate all grease fittings.

B. After operating for 10 hours:

1. Repeat steps 1 through 5 listed above. (Section A)
2. Go to the normal servicing and maintenance schedule as defined in the Maintenance Section.

5.4 PRE-OPERATION CHECKLIST

Efficient and safe operation of the 3 Point Hitch Wood Chipper requires that each operator reads and understands the using procedures and all related safety precautions outlined in this section. A pre-operation checklist is provided for the operator. It is important for both the personal safety and maintaining good mechanical condition that this checklist is followed.

Before operating the Wood Chipper and each time thereafter, the following areas should be checked off:

1. Lubricate the machine per the schedule out- line in the Maintenance Section.
2. Check the rotor, blades and twig-breaker. Remove any twine, wire or other material that has become entangled.
3. Check the condition and clearance of the twig- breaker, rotor and stationary blades. Adjust or replace as required.
4. Check that all bearings turn freely. Replace any that are rough or seized.
5. Make sure that all guards and shields are in place, secured and functioning as designed.
6. Check the condition of the curtain in the feed hopper. It must be in good condition to pre- vent chips from flying out.

A PTO driveline is supplied with the machine. To accompany the variety of 3 point hitch geometry available today, the driveline can be too long for most machines or too short for others. It is very important that the drive- line be free to telescope but not to bottom out when going through its working range. If the driveline bottoms out, the bearings on both the machine and tractor PTO shaft will be overloaded and fail in a short time.

1. To determine the proper length of the driveline, follow this procedure:

a. Clear the area of bystanders, especially small children.

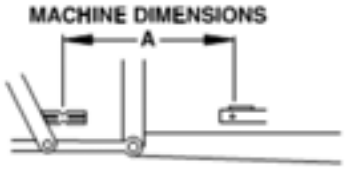

b. Attach the chipper to the tractor (see section5.8) but do not attach the driveline

c. Raise the machine until the input shaft is level with the tractor PTO shaft

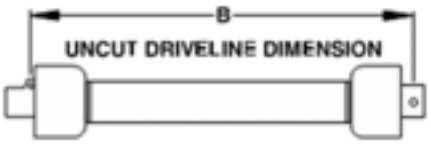

d. Measure the dimension between the locking grooves on the tractor PTO shaft and the machine input shaft.

e. Measure the same dimensions on the compressed driveline

f. If the compressed driveline dimension exceeds the machine dimension, the driveline will have to be cut

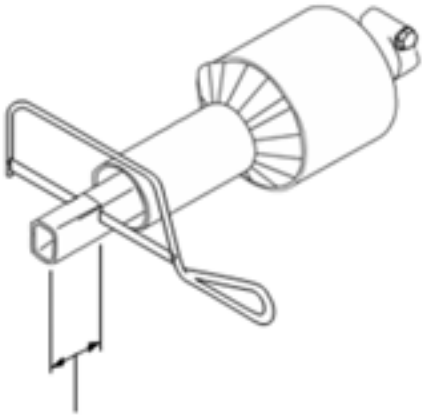

2. When cutting the driveline, follow this procedure:

a. Subtract the machine dimension (A) from the uncut driveline dimension (B) or (B-A). This dimension determines how much too long the driveline is.

(B-A) + 1 INCH = C (CUT OFF DIMENSION)

b. Add another inch (25 mm) to the dimension to be sure it doesn't bottom out, to determine (C) the cut off dimension

c. Use a hacksaw to cut dimension (C) from both ends. Cut both the plastic tubes and the metal cores.

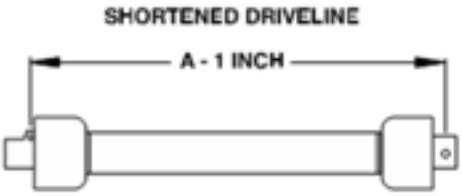

d. Use a file to remove the burrs from the edges that were cut

e. Assemble the 2 ends of the shaft.

f. Make sure the shaft can telescope freely. If it does not, separate the 2 parts and inspect for burrs or cuttings on the shaft ends. Be sure it telescopes freely before installing

Use a stick or branch to push any piece of material into the rotor that does not move on its own and stops in the hopper. Do not take a chance with getting your hand caught in the rotor.

Always wear personal protective equipment (PPE) whenever operating the machine. This includes but is not limited to protective shoes with slip resistant soles, protective goggles or face shield, heavy gloves, hearing protection and protective clothing.

Do not place metal, bottles, cans, rocks, glass or other solid material into the wood chipper.

If something like this gets into the machine, stop the machine immediately for a detailed inspection. Stop engine, remove ignition key and place in your pocket and wait for all moving parts to stop before inspecting or unplugging. Inspect machine for damaged or loosened parts before resuming work.

a. Rotor b. Stationary

Blades:

There are 2 types of blades used on the Wood Chipper. They work together to cut, shear and shred the wood as it moves through the machine.

Rotor blades:

The rotor is equipped with 4 blades placed at 90° to each other to keep the rotor in balance. If one needs to be changed, the one opposite should be changed.

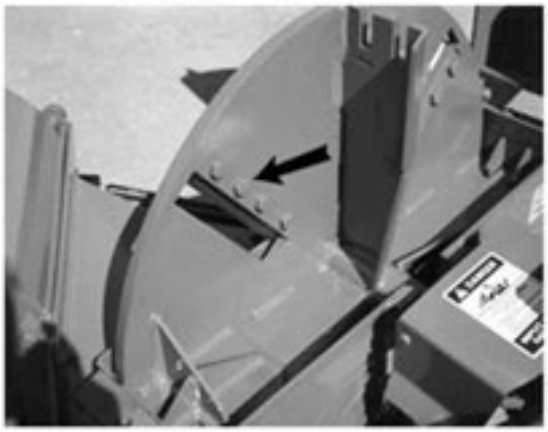

Rotor

Stationary blade:

Each machine is equipped with a stationary blade that acts as a stop for the moving rotor blades.

Clearance:

It is recommended that the clearance between the rotor and stationary blades be set and maintained at 1/32 inch to obtain the best performance. Use the stationary blade mounting bolts to set the clearance as required

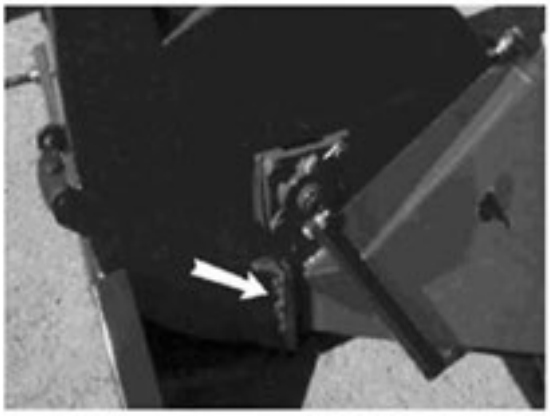

Stationary

Twig Breaker:

Each machine is equipped with a twig breaker to break up twigs or other long material as it moves through the rotor compartment. Open the rotor cover and check the condition of the breaker on a weekly basis. Also check for any entangled material when the rotor cover is opened. Remove this material prior to closing the cover and resuming work.

Unblocking:

Although the machine is designed to handle a wide variety of material without any problem, occasionally it blocks. When the machine blocks, follow this procedure to unblock:

a. Clear the area of bystanders, especially small children.

b. Stop the engine, remove the ignition key and place it in your pocket and wait for all moving parts to stop before unblocking.

c. Pull the material out of the feed hopper. Be sure all the material is out and nothing is jammed or wedged between the input opening and the rotor.

d. Pull the material out of the discharge hood. Use a stick to poke loose any material jammed into the discharge hood. Do not allow anything to remain in this area.

Severe Block:

Loosen the feed hopper anchor nuts and raise the feed hopper. Remove material from inside the rotor compartment.

Clean out the discharge area/rotor.

Open the rotor cover and clean out the housing. Be sure to turn the rotor by hand to be sure there is nothing jammed between the rotor and stationary blades.

Close, install and fold down all components opened to unblock. Tighten fasteners to their specified torque.

Check that everyone is clear of machine before restarting engine.

Start the engine, engage the PTO and resume working.

Cleaning:

Clean the machine frequently to prevent a build-up of dust, chips and trash on the frame. A clean machine reduces the chance of rusting.

Curtains:

Each feed hopper is designed with an internal rubber/belting curtain to prevent chips and debris from coming out of the hopper. When working, check the condition of the curtain each day prior to use. Replace the curtain if torn, damaged or missing to minimize the chance of material coming out of the feed hopper.

Sharpening Blades:

The rotor and stationary blades need to be sharp for the chipper to perform as expected. It is recommended that the rotor blades be removed from the rotor when sharpening. Always sharpen the blades at a 45° angle to provide the best cutting effect as it meets the stationary blade. Be sure to tighten the blade mounting bolts to their specified torque when re-installing the blades to the rotor.

The stationary blade is designed with 4 sharp corners that can be utilized. When the corner facing the rotor blade rounds over, remove the blade and re-install with a different corner facing the rotor blade. Use the stationary blade to set the clearance to the rotor blade when re-installing. Be sure to tighten mounting bolts to their specified torque.

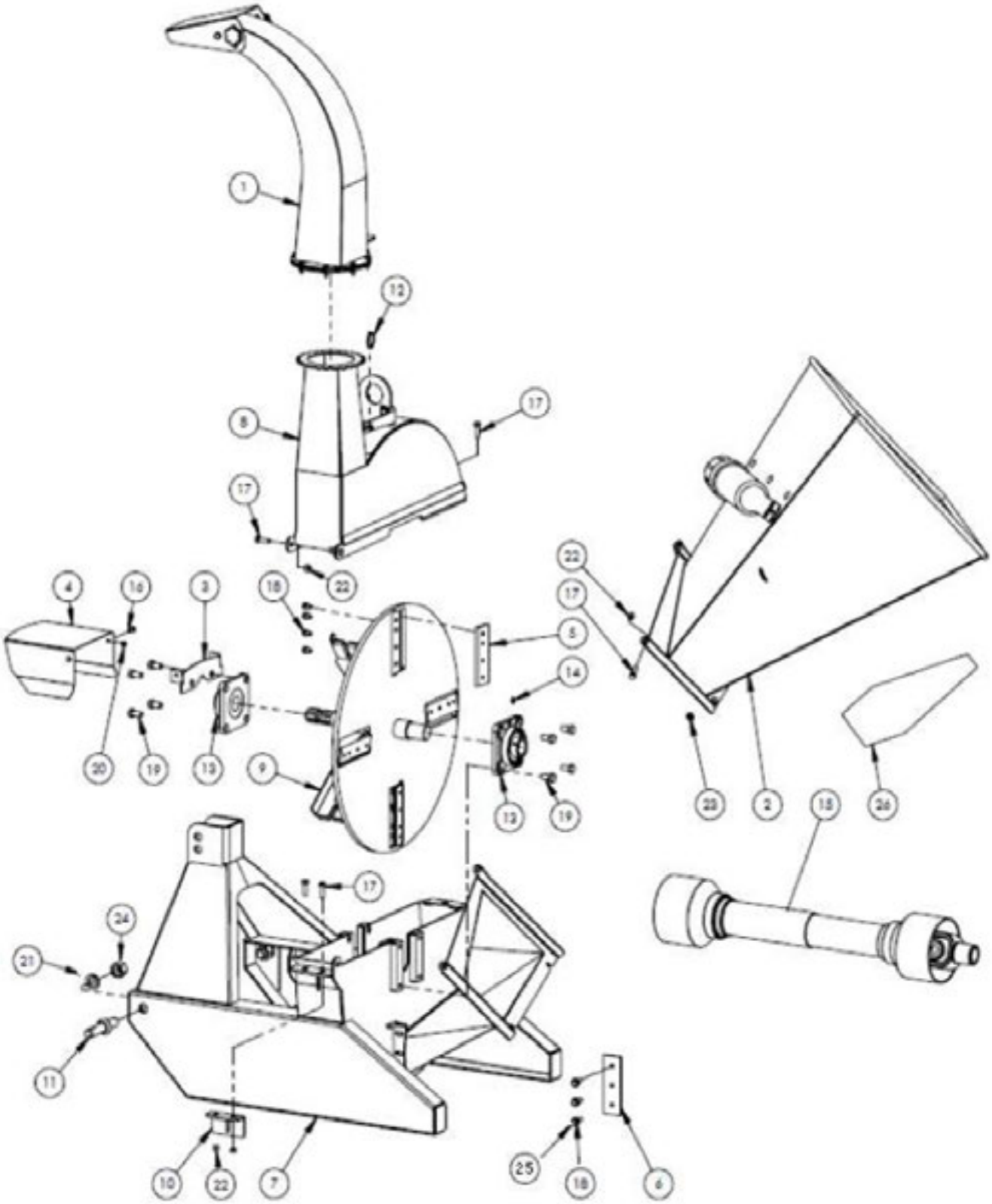
1
12
8
17
17
22
4
16
3
18
5
14
20
19
13
9
13
19
22
17
23
2
15
26
17
24
21
11
10
22
7
25
18
6

Ref	Part No.		Description		Q'ty
	BX42S	BX62S	BX42S	BX62S	
1	1011A101	1012A201	Assembly, discharge chute		1
2	1011A102	1012A201	Self-feed hopper		1
3	1011L106	1012L201	Bracket, PTO cover mount		1
4	1011L112	1012L201	PTO cover		1
5	1011M103	1012M201	Knife, rotor		4
6	1011M104	1012M201	Knife, ledger		1
7	1011W101	1012W201	Housing, bottom rotor		1
8	1011W102	1012W201	Housing, upper rotor		1
9	1011W103	1081W201	Rotor		1
10	1011W104	1012W201	Twig breaker		1
11	Z11431		Implement pin		2
12	Z12110		Latch pin		1
13	Z25204	Z25203	4-bolt bearing		2
14	GB/T1152-89/M6		Grease zerk M6		2
15	Z44501		#5 PTO shaft M10 shear		1
16	GB/T5783/M6x20	GB/T5783/M10x20	Bolt M6x20	Bolt M10x20	2
17	GB/T5783/M12x30	GB/T5783/M12x35	Bolt M12x30	Bolt M12x35	7
18	GB/T5786/M8x1x15	GB/T5786/M12x1.5x25	Bolt M8x1x15	Bolt M12x1.5x25	19
19	GB/T5786/M16x1.5x45		Bolt M16x1.5x45		8
20	GB/T889.1/M6	GB/T889.1/M10	Lock nut M6	Lock nut M10	2
21	GB/T93/22		Lock washer 22		2
22	GB/T889.1/M12		Lock nut M12		5
23	GB/T6177.1/M10		Flange nut M10		2
24	GB/T6171/22x1.5		Nut M22x1.5		2
25	GB/T97.1/8	GB/T97.1/12	Plain washer 8	Plain washer 12	3
26	Z94601	Z96605	SMV decal/spade		1

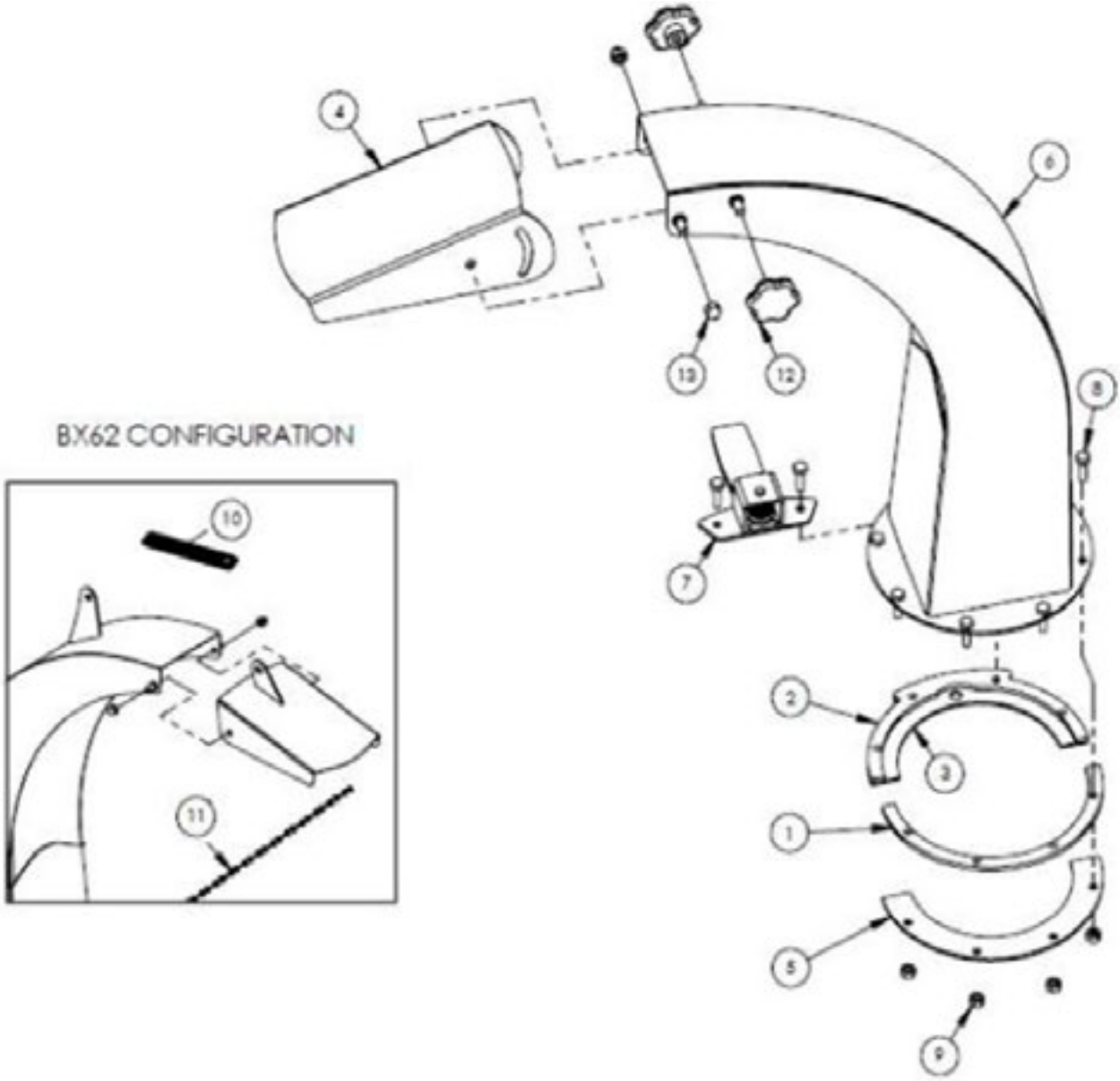
BX62 CONFIGURATION
4
6
13
12
8
10
7
2
3
1
11
5
9

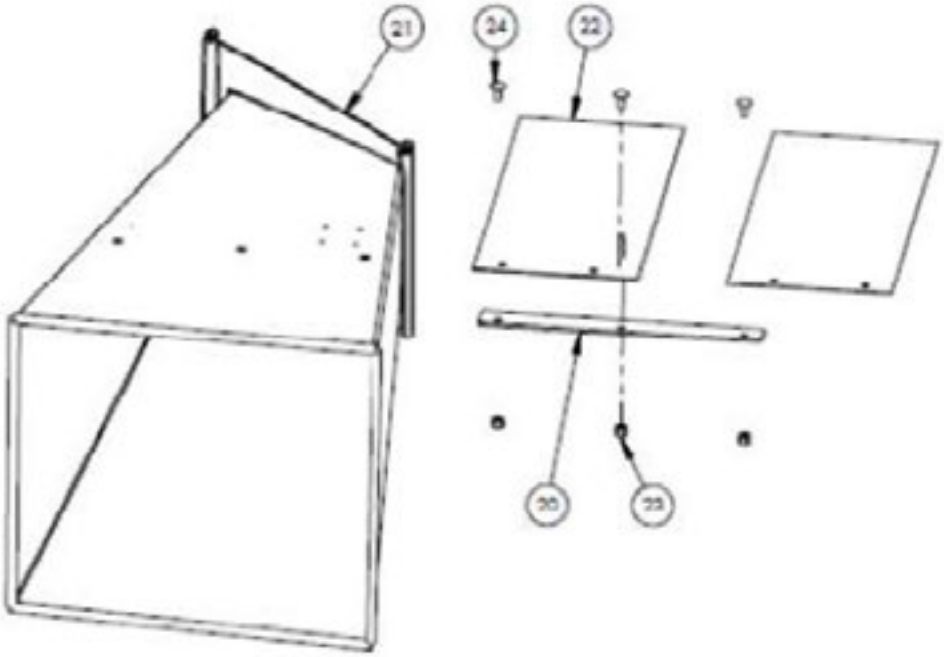
21
24
22
20
23

Ref	Part No.		Description		Q'ty
	BX42S	BX62S	BX42S	BX62S	
1	1011L127	1012L127	Plate, space ring		1
2	1011L127	1012L127	Plate, spacer ring		1
3	1011L127	1012L127	Plate, hood capture		1
4	1011L127	1012L127	Deflector, discharge chute		1
5	1011L127	1012L127	Plate, hood capture		4
6	1011W127	1012W127	Discharge chute		1
7	1012W208		Assembly, hood latch		1
8	GB/T5783/M6x20		Bolt M6x20		8
9	GB/T889.1/M6		Lock nut M6		8
10		Z31403	Spring 25x178mm heavy		1
11		Z92304	Single-jack chain #10 (35 links)		35
12	Z19313		Knob		2
13	GB/T802/M8		Acorn nut M8		2
20	1011L151	1014L451	Strap, hopper flap		1
21	1011W107	1012W207	Weldment, infeed hopper		1
22	1012S203	1012S203	Flap, hopper		2
23	GB/T889.1/M8		Lock nut M8		3
24	GB/T12/M8x25	GB/T5783/M6x20	Carriage bolt M8x25	Bolt M6x20	¾

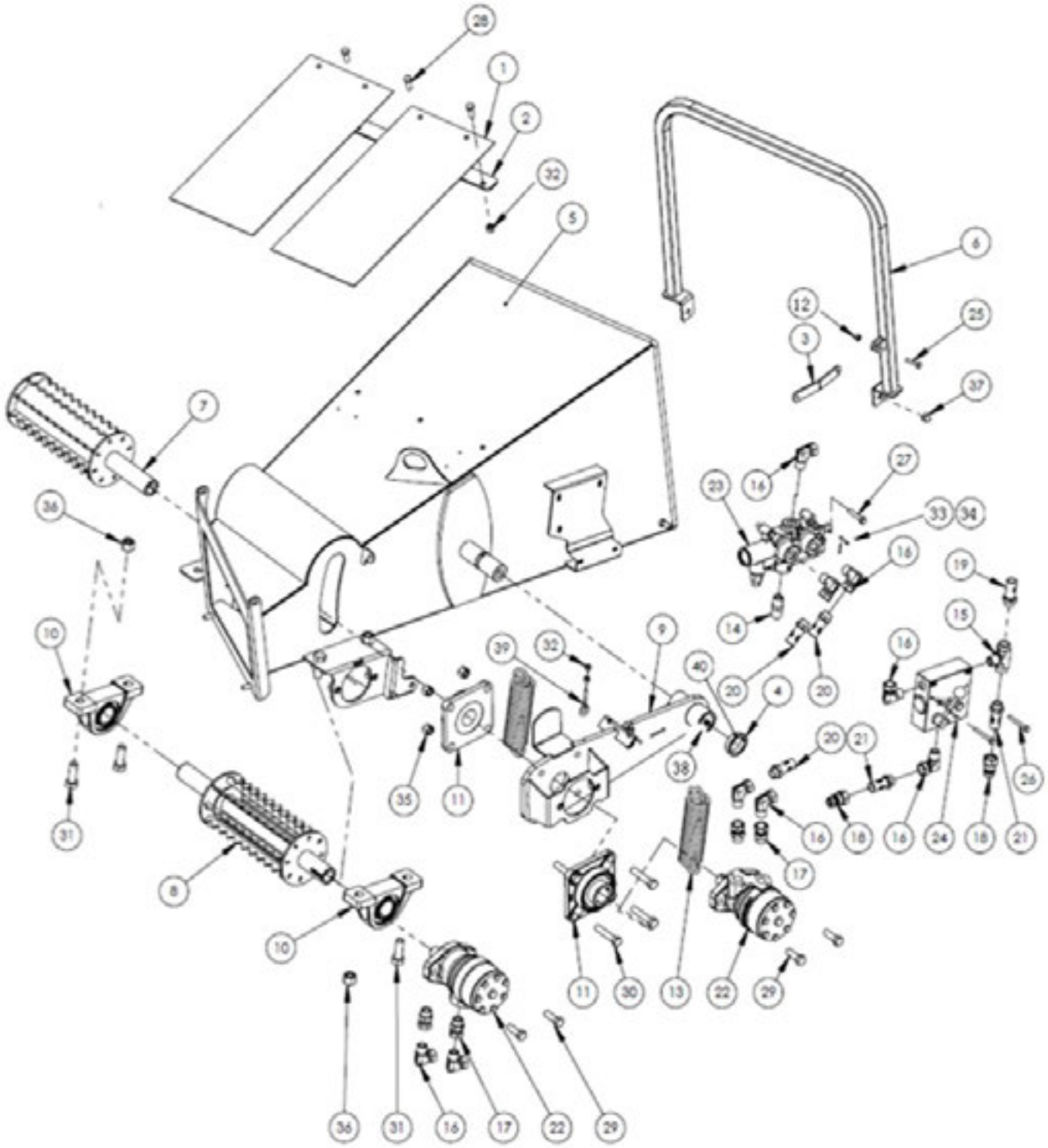
28
1
2
32
5
6
12
25
3
37
7
23
16
27
33
34
36
16
19
14
15
10
39
32
9
40
20
4
20
16
20
21
38
26
35
11
31
16
18
16
24
18
21
17
8
10
11
30
13
22
29
36
31
16
17
22
29

Ref	Part No.		Description		Q'ty
	BX42S	BX62S	BX42S	BX62S	
1	1012S203		Flap, hopper		2
2	1011L151	1014L451	Safety flap bar		1
3	1013L413	1014L413	Feed handle link bar		1
4	1013M025		Arm capture bushing		1
5	1013W200	1014W401	Weldment, main hopper		1
6	1013W202	1014W405	Feed handle		1
7	1013W203	1014W403	Drum, upper feed roller		1
8	1013W204	1014W404	Drum, lower feed roller		1
9	1013W205	1014W402	Roller arm (1)		1
10	Z24101		P208 pillow block		2
11	Z25204		4-bolt bearing		2
12	GB/T889.1/M6		Lock nut M6		1
13	Z31501		Spring 2x7 heavy		2
14	Z51122		Nipple		1
15	Z51161		Tee		1
16	Z51331		Elbow		9
17	Z51371		Straight		4
18	Z51903		Pioneer coupler		2
19	Z52302		Hose		1
20	Z52303		Hose		3
21	Z52304		Hose		2
22	Z54102		M&S hydraulic motor		2
23	Z56203		Control valve, single spool		1
24	Z56303		Hydraulic flow control		1
25	GB/T5783/M6x25		Bolt M6x25		1
26	GB/T5782/M6x65		Bolt M6x65		2
27	GB/T5782/M8x50		Bolt M6x50		3
28	GB/T12/M8x25	GB/T5783/M6x20	Carriage bolt M8X25	Bolt M6x20	¾
29	GB/T5783/M12x45		Bolt M12x45		4
30	GB/T5782/M12x65		Bolt M12x65		4
31	GB/T5783/M16x45		Bolt M16x45		4
32	GB/T889.1/M8		Lock nut M8		8/5
33	BX62R.00.101		Pin		1
34	GB/T91/2.5x10		Split pin 2.5x10		1
35	GB/T889.1/M12		Lock nut M12		8
36	GB/T889.1/M16		Lock nut M16		4
37	GB/T802/M8		Acorn nut M8		2
38	GB/T1152-89/M6		Grease zerk M6		1
39	Z76511		Eye bolt		2
40	GB/T77/M6x6		Set screw M6x6		2

NOTES